| HONDALINE | Accessory | Application | Publications No. |
|---|---|---|---|
| | TYPE II INTERCOM<br>CB TRANSCEIVER<br>CASSETTE DECK | GL1100 | HP 189 8112 |
| | | | Issue Date<br>DECEMBER 1981 |

## PREFACE

Congratulations on purchasing this quality Hondaline Type II Audio system. This booklet is your guide to the installation of your new Hondaline Type II Intercom, CB Transceiver Cassette Deck. Please take the time to read the booklet carefully. (Your authorized Honda dealer will be glad to provide further information or assistance and is equipped to handle your further service needs.)

## TOOLS REQUIRED

- Ratchet and 12" extension
- 7 and 10 mm Sockets-
- 8, 10, and 14 mm Box wrenches
- Drill
- 1/8", 7/32", 3/16", and 1/4" Bits
- 2.5, 4, 8 mm Allen wrench
- #1 and #2 Phillips screwdrivers
- Sharp knife or Razor blade
- Hammer
- Centerpunch
- Masking tape
- 17 mm open-end wrench

## PARTS LIST

- Intercom

Fig. 1

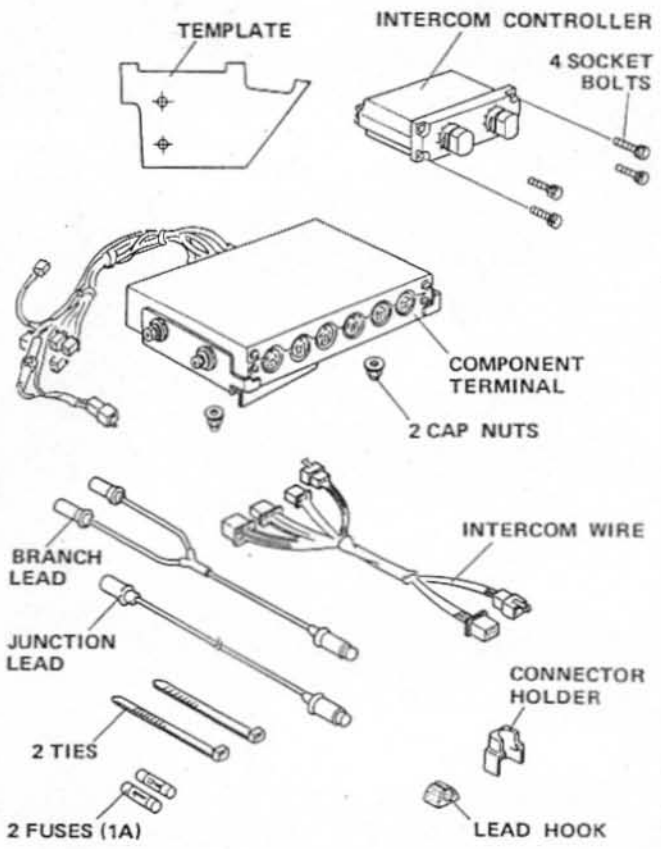


- CB Transceiver

Fig. 2

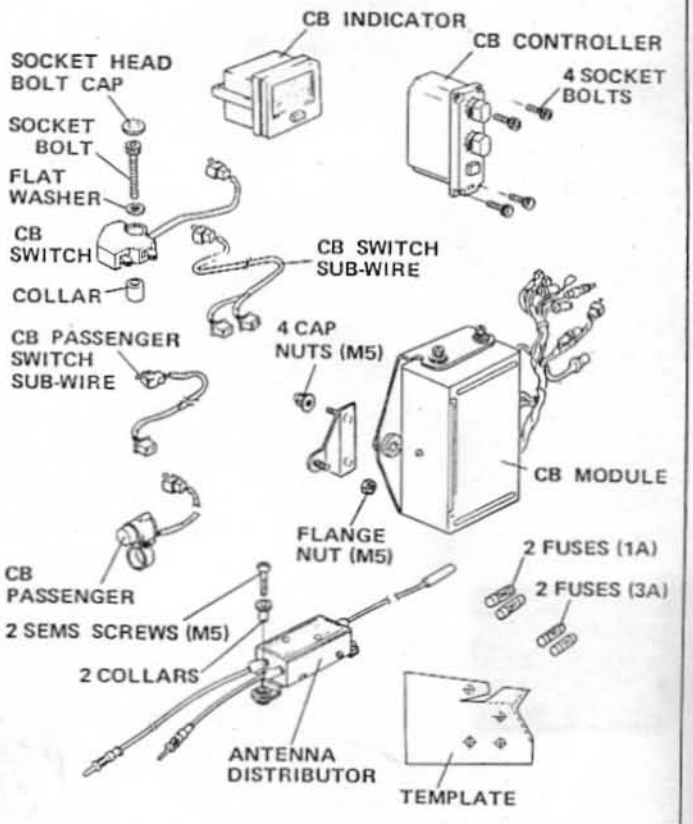




HONDA MOTOR CO., LTD. 1981-All Rights Reserved

08118-MB980-95 Printed in Japan
284-3603-00

■ Cassette Deck

Fig. 3

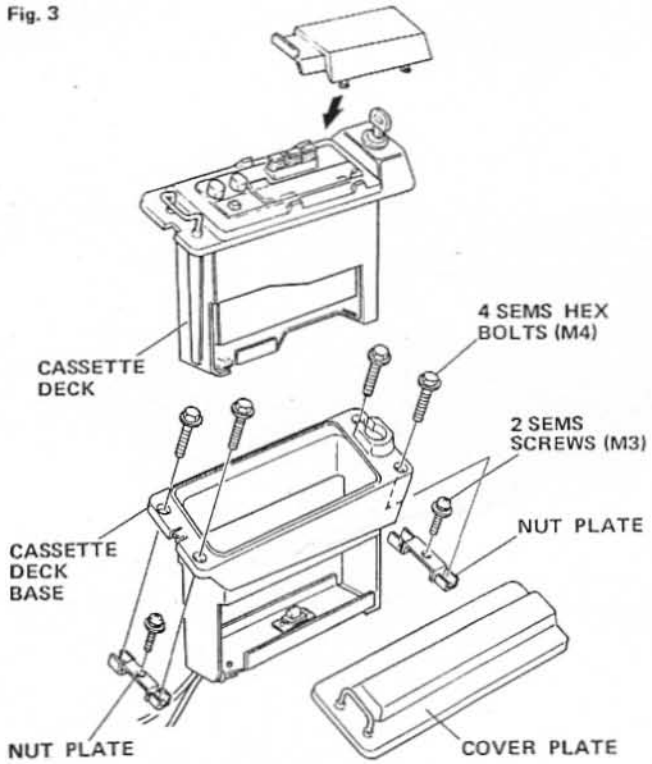


## OVERALL LAYOUT

Fig. 4

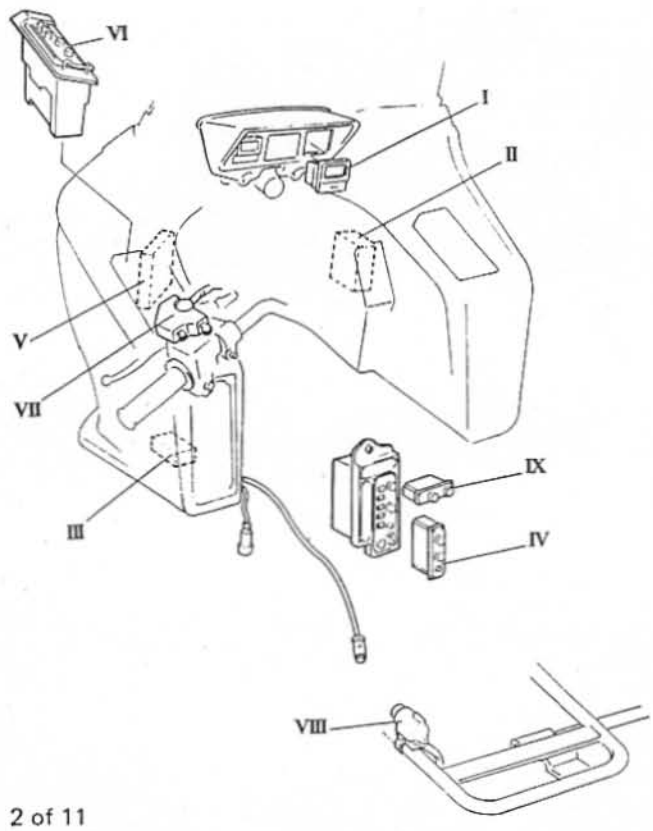


## INSTALLATION

■ Outline Procedures

This paragraph deals with general outline information needed for mounting the individual components on the fairing.

1) Remove fairing and fairing parts.
2) Drilling unit mount holes.
3) Install six wire clips.
4) Remove some radio parts.
5) Install CB indicator I on indicator panel, then install indicalor panel on fairing.
6) Install CB module II.
7) Install Antenna distributor III.
8) Install CB switch sub wire.
9) Install CB controller IV. and Intercom controller IX.
10) Install Component terminal V.
11) Install Branch lead.
12) Plug in all connectors to component terminal.
13) Route wires inside fairing.
14) Install Cassette deck VI.
15) Install CB Switch VII on left handle lever bracket and route wire.
16) Install CB Passenger switch VIII.
17) Route Junction lead along with frame pipe.
18) Install fairing on motorcycle and connect wires.
19) Confirm that all system operate properly. Reinstall parts removed in step 1.

## REWORKING

- **Remove Fairing and Fairing Parts (Fig. 5)**

1) Remove fairing from your motorcycle when already mounted.
2) Remove right and left fairing pockets, right and left turn signal lenses, right and left nutplates and left hole cover indicator base panel from fairing (Fig. 5).

Fig. 5

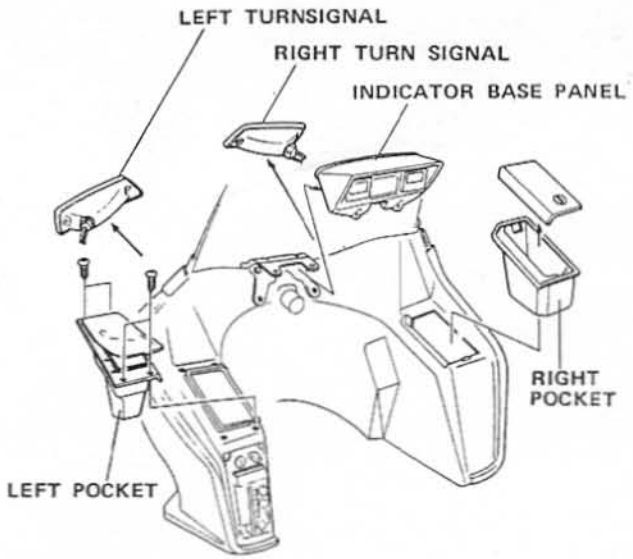


- **Reworking on fairing (Fig. 6, 7, 8, 9)**
  (Drilling component terminal, CB module and casset deck mount holes)

—CB, component terminal—

1) Lightly roll template so that it will follow contour of fairing snugly.
2) Position template on fairing with its upper and outer edges aligned with those of fairing as indicated by arrows.
3) Attach template to fairing using adhesive tape where shown.
4) Punch mark centers of four holes with a drift and hammer.
5) Drill 6 mm holes through marked centers.

Fig. 6

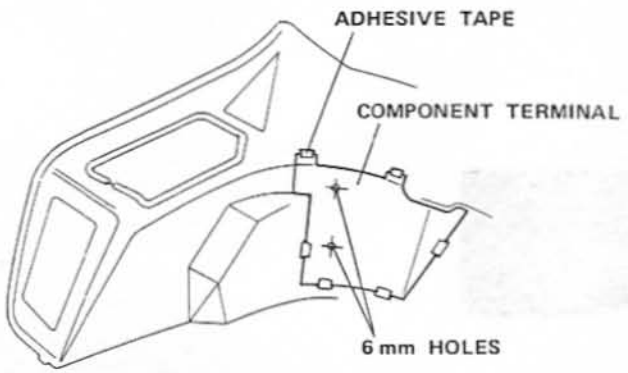


Fig. 7

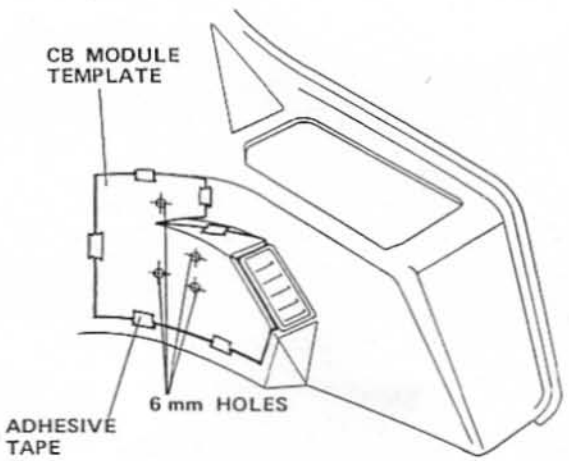


—Cassette deck—

6) Punch mark centers of two holes with a drift and hammer.
7) Drill 6 mm holes through marked centers.

Fig. 8

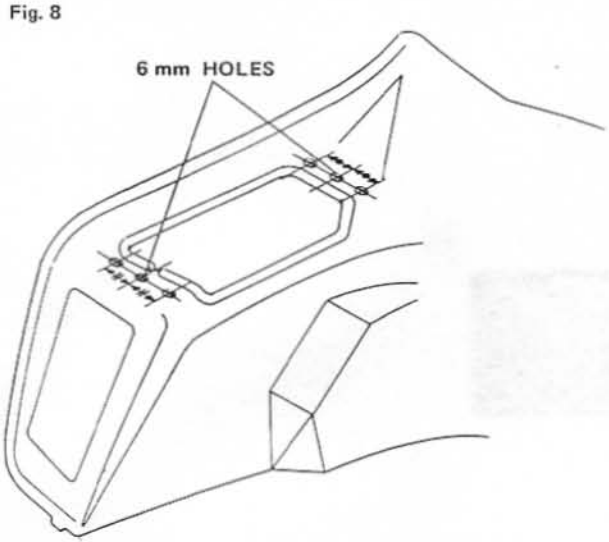

8) Install six wire clips to temporarily secure wires as shown.

Fig. 9

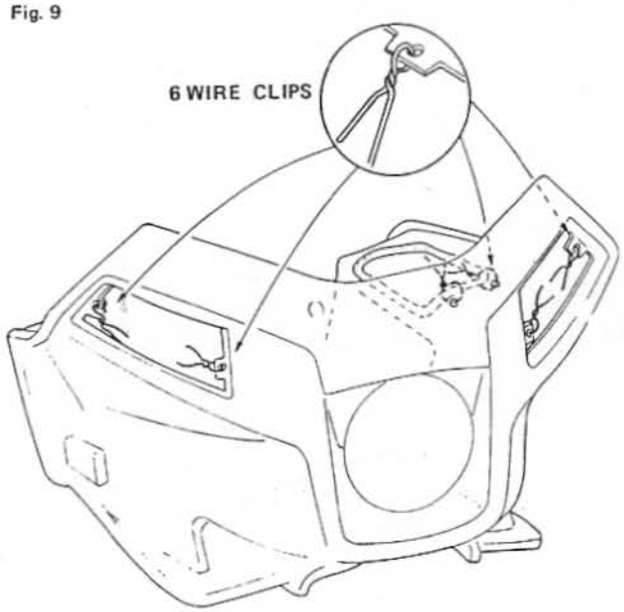


9) Install windshield on fairing before installing speakers.

- **Removing Radio Parts (Fig. 10, 11, 12)**

Remove several radio parts from fairing as follows when already radio mounted.

1) Pull out bundled wires through left turn signal lens hole.

Fig. 10

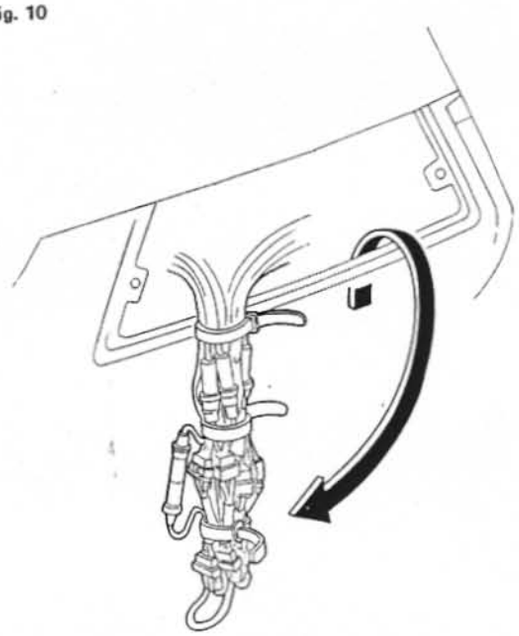

2) Unbundle three ties and disconnect adapter wire harness and RADIO/PA JOINT WIRE.

Fig. 11

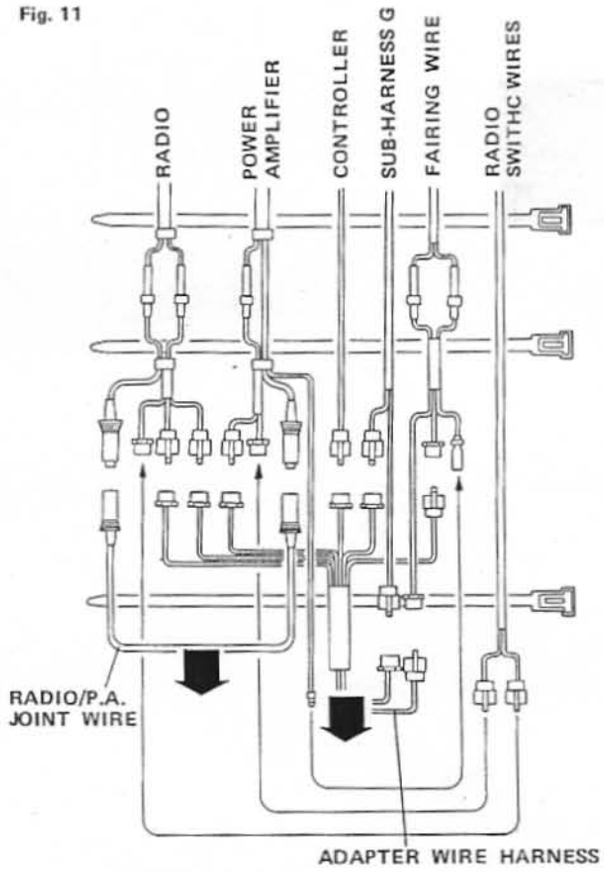


3) Disconnect and remove one antenna feeder of two.

Fig. 12

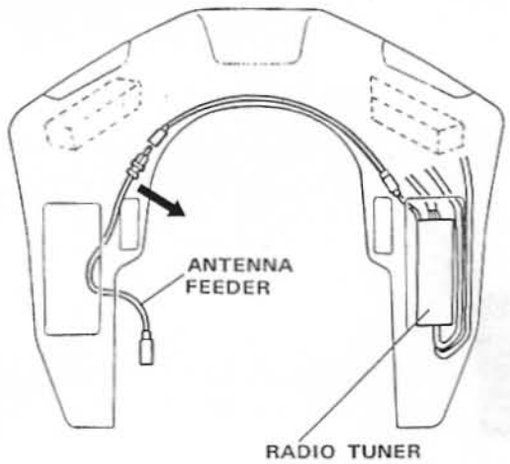

## INSTALLATION ON FAIRING

CB

- **CB Indicator Installation (Fig. 13, 14, 15, 16)**

1) Install CB indicator in right hole of indicator panel. (Remove indicator panel from fairing when already mounted. Remove volt-meter from right hole when already mounted and install it in central hole and install two blind lid in both side hole of volt-meter.)

Fig. 13

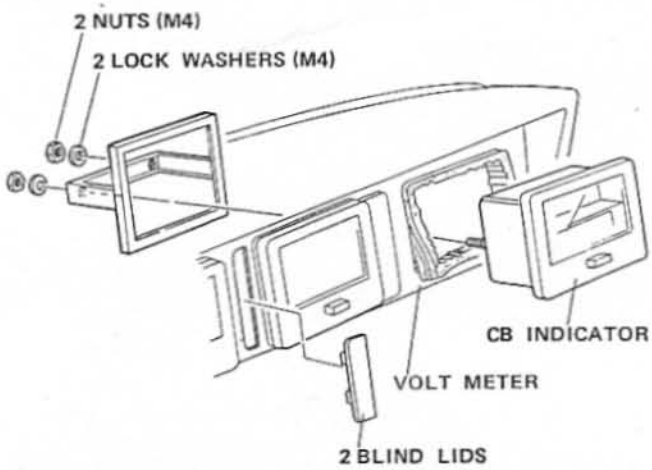


2) Reinstall indicator panel on base bracket.
3) Rout indicator panel wire out through right turn signal less hole.

Fig. 14

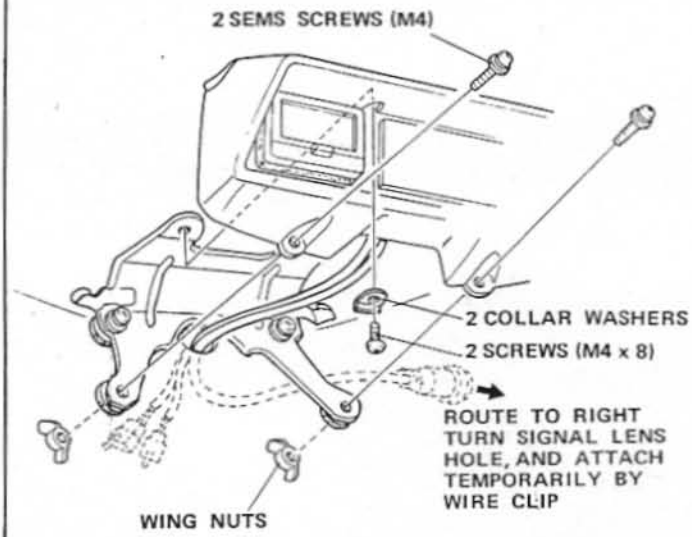


- **CB Module Installation (Fig. CB-3)**

1) Insert CB module and CB bracket (not yet assembled) into fairing through right pocket hole.
2) Insert CB module studs into holes in fairing and install using a cap nut on each stud loosely.
3) Insert CB bracket stud into holes of CB module and then insert studs into holes and install using a flunge nut on stud loosely.
4) Insert CB bracket stud into holes in fairing and install using a cap nut on each stud loosely.
5) Tighten flunge nut securely first, and then 4 cap nuts.

Fig. 15

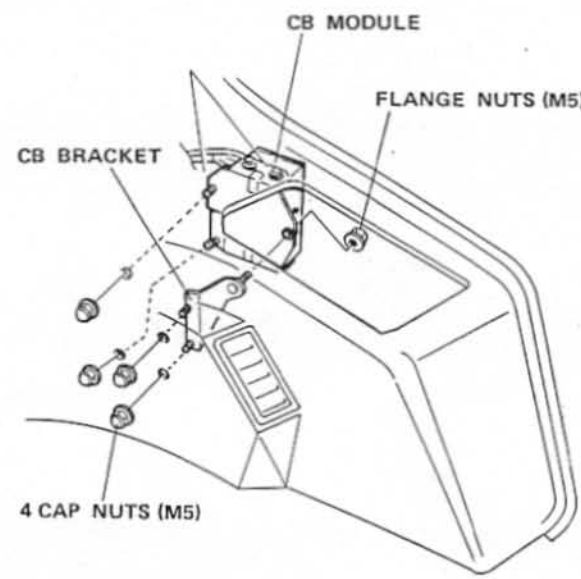


6) Route wires (with fuses and miniture connectors) under headlight and out through left turn signal lens hole. Temporarily secure wires with wire clips.
7) Route wires bounded with yellow tape under headlight and out through left pocket hole.
8) Remove yellow tape from wires and secure wires with wire clip temporarily.
9) Pass indicator wire out through right turn signal lens hole and connect it to wire from CB indicator.

Fig. 16

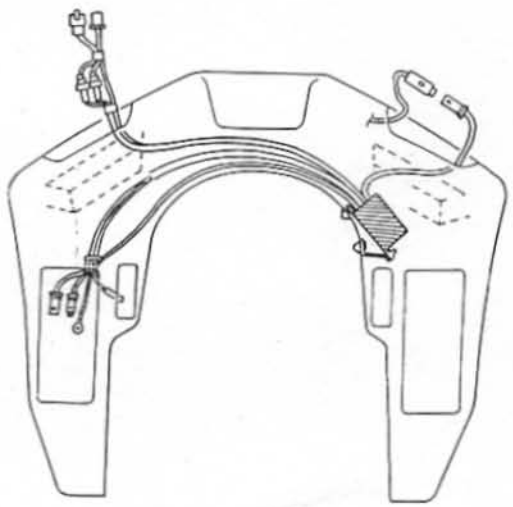

- **Antenna Distributor Installation (Fig. 17, 18)**

1) Install antenna distributor on left nut plate as shown.

Fig. 17

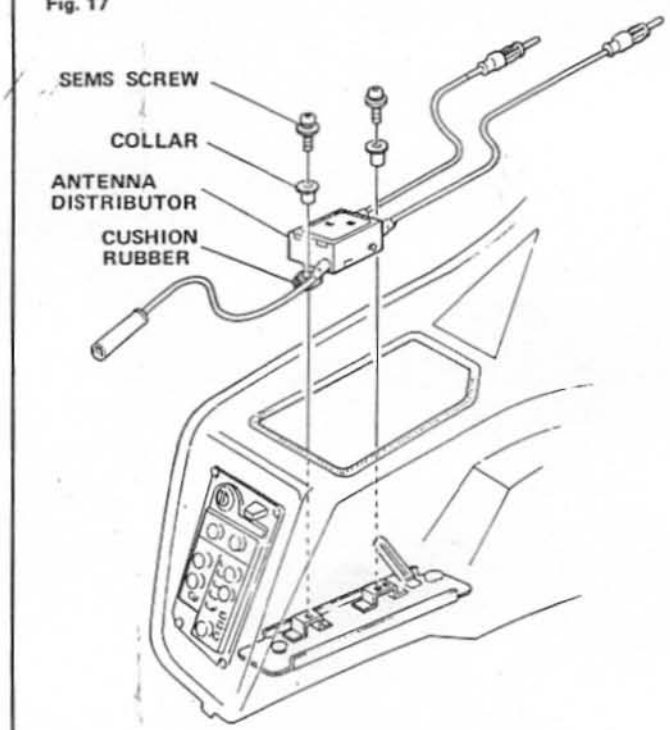


2) Pass antenna feeder of distributor indicated "ANTENNA" out through round hole above 9-pin connector.
3) Connect antenna feeder of distributor indicated "AM/FM RADIO" to antenna feeder from radio tuner.
4) Connect antenna feeder of distributor indicated "CB-SET" to antenna feeder from CB module.
5) Connect CB controller wire to wire from CB module.
6) Tighten green ground wire with double sems screw.

Fig. 18

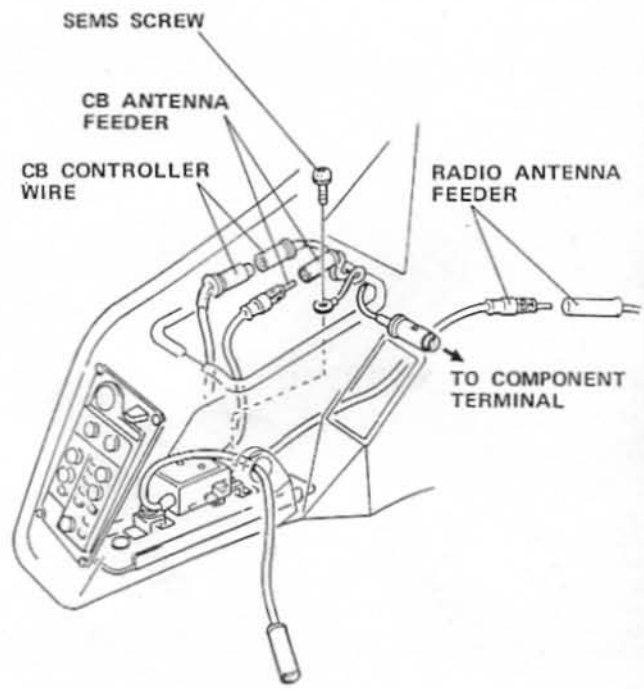

■ **CB Switch Sub Wire Installation (Fig. 19)**

1) Route CB switch sub-wire out through left turn signal lens hole and secure with wire clip as shown. (Route along radio switch sub wire)

Fig. 19

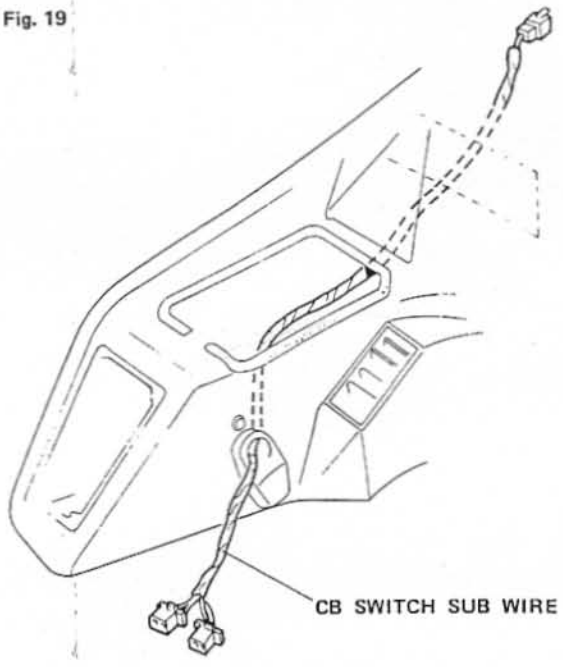


■ **CB Controller Installation (Fig. 20)**

Remove CB controller blind lid from controller holder and slide CB controller into controller holder and install using four socket bolts.

Fig. 20

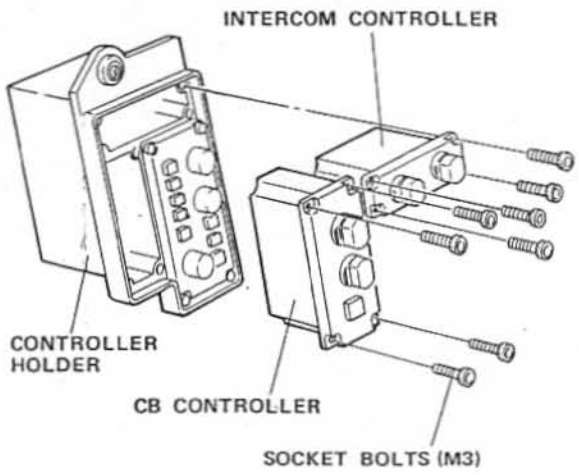


■ **Component Terminal Installation (Fig. 21)**

1) Insert component terminal into fairing through left turn signal lense hole.
2) Insert component terminal studs into holes in fairing and install using a cap nut on each stud. Tighten securely.
3) Pull out wires through left turn signal lens hole and secure with wire clip.

Fig. 21

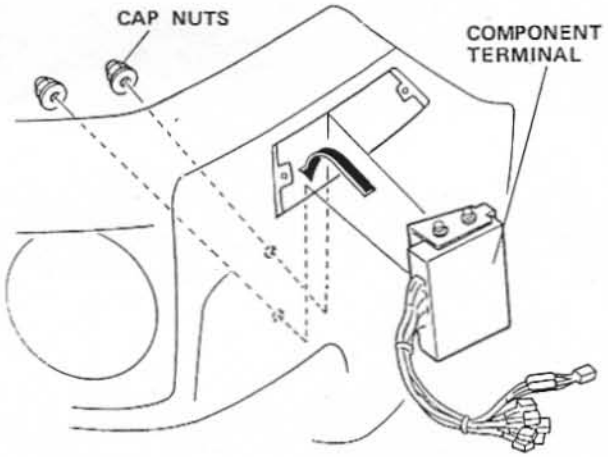


■ **Branch Lead Installation (Fig. 22)**

1) Pass branch lead in through hole above 9-pin connector and plug in to component terminal.
2) Attach lead hooks and secure branch lead with them where shown.

Fig. 22

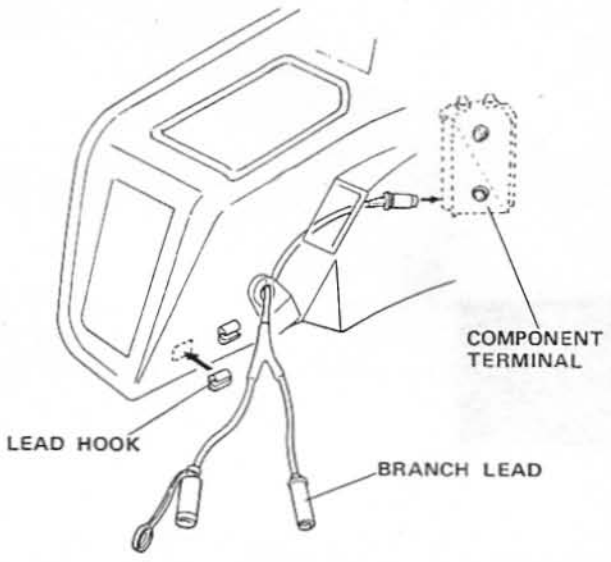

■ Connector Plugging in (Fig. 23)

Plug in all connectors should be connect to component terminal as shown.

Fig. 23

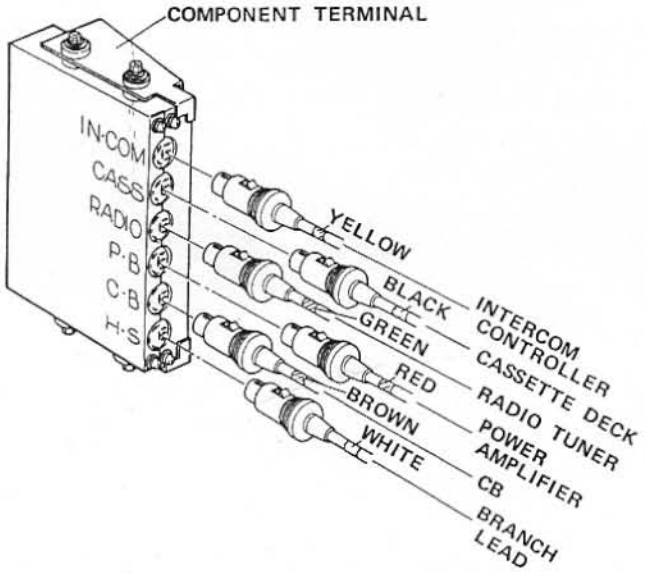


■ Routing Wires Inside Fairing (Fig. 24, 25)

1) Bundle all harness wires passed out of left turn signal lens hole (not yet connected) with ties (1) and (2) ((a) in Fig. INT-6).
2) Connect Inter com wires and other wires ((b) in Fig. INT-6).
3) Connect audio main harness to sub harness G, fairing wire and other wires ((c) in Fig. INT-6).
4) Bundle wires and harness with ties as shown ((d) in Fig. INT-6).

Fig. 24

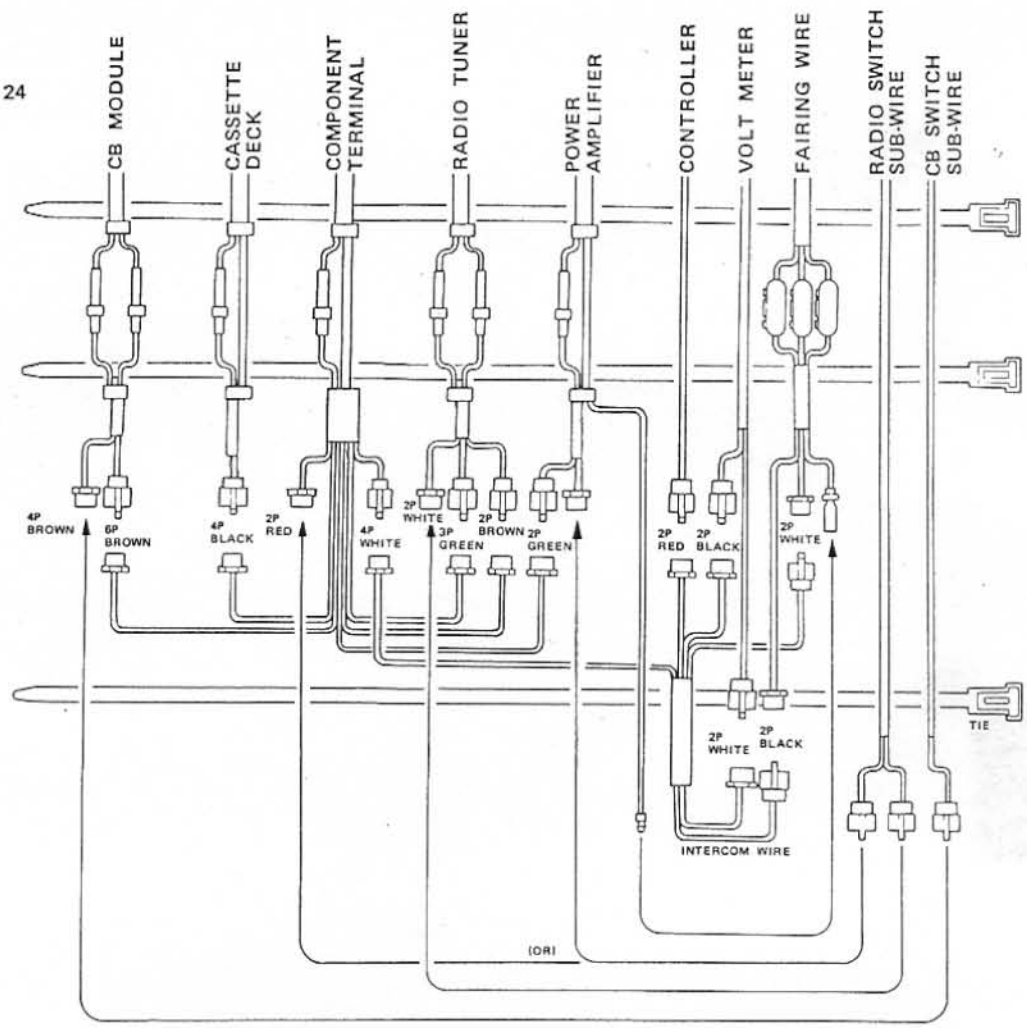

5) Press all bundled wires and harness into fairing through left turn signal lens hole.

Fig. 25

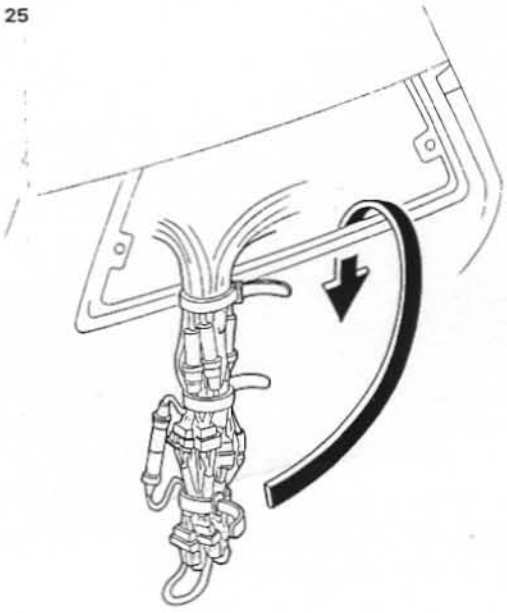

- **Cassette Deck Installation (Fig. 26, 27)**

1) Install front and rear cassette deck nut plates as shown.
2) Install Cassette deck base.

Fig. 26

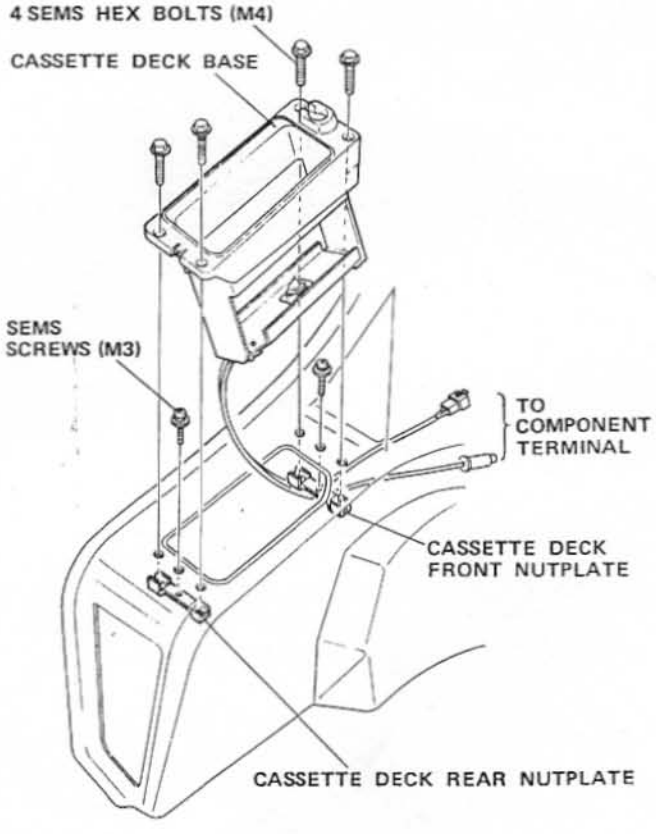


3) Route wire through left turn signal lens hole and secure wire temporarily.
4) Set cassette deck in deck base.

Fig. 27

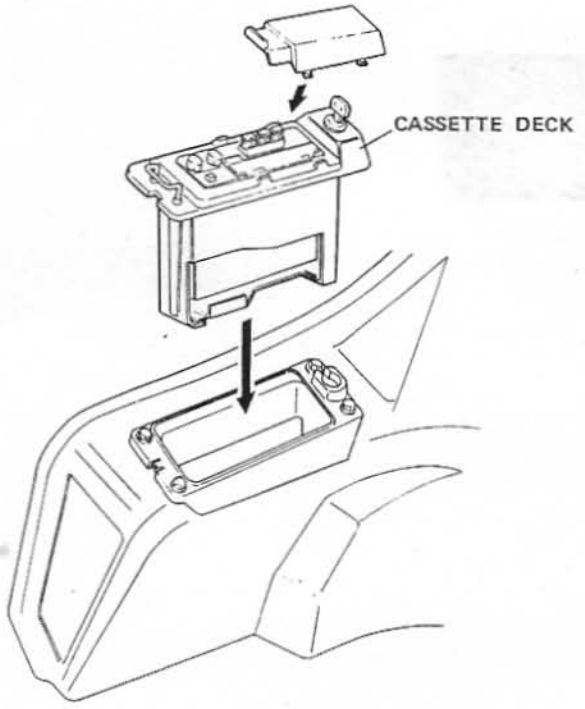


- **CB Switch Installation (Fig. 28, 29, 30, 31)**

1) Install CB switch and Radio switch as shown.

Fig. 28

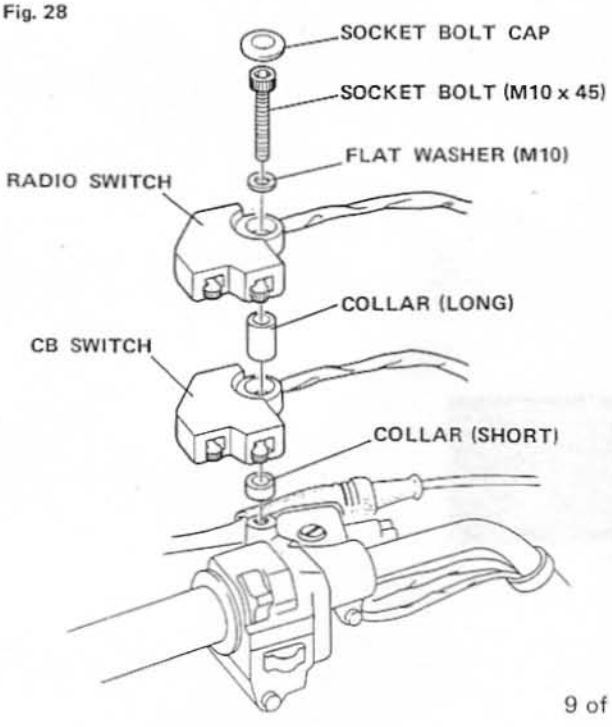

2) Route switch wire along with turn signal switch wires and radio switch wire and attach them to handlebar with wire bands positioned where shown.

Fig. 29

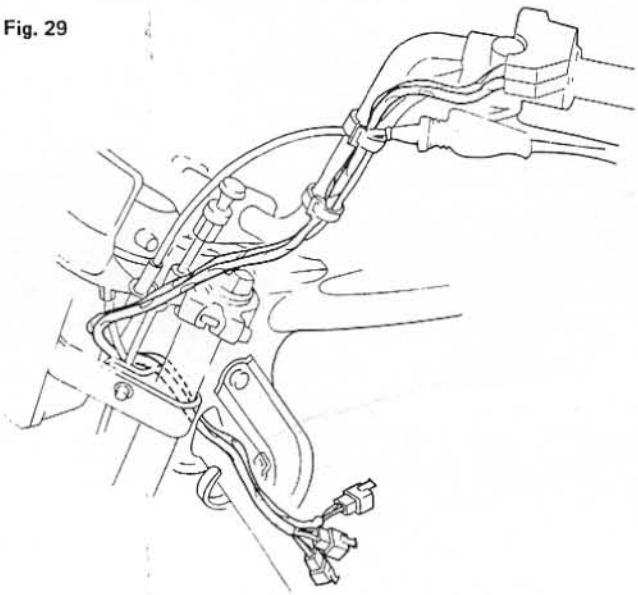

3) Install CB passenger switch on rear luggage as shown.

Fig. 30

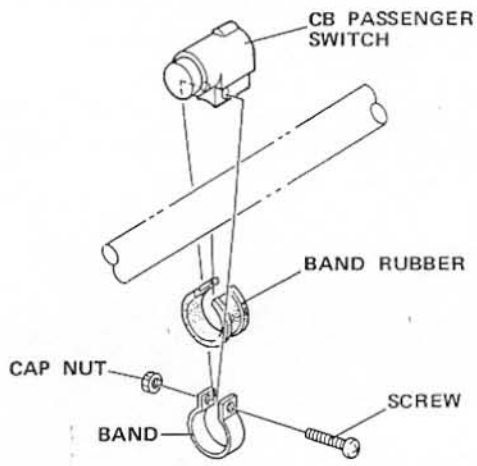


4) Route CB passenger switch sub wire along with antenna feeder.

Fig. 31

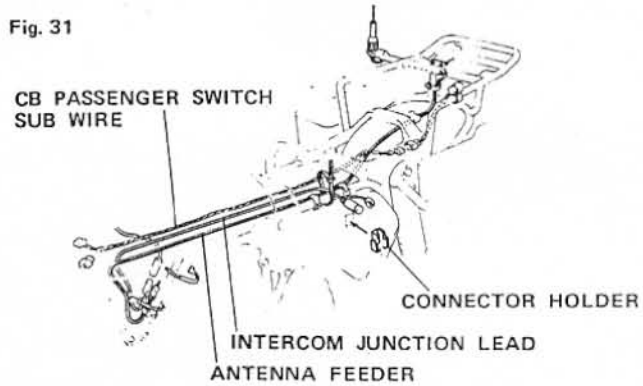


■ **Securing Junction Lead (Fig. 31)**

1) Route the junction lead along the antenna feeder and secure with plastic tie where shown.
2) Attach connector holder to left side cover, and insert passenger's Din conector in holder.

## FAIRING INSTALLATION (Fig. 32)

1) Install fairing on motorcycle.
2) Connect motorcycle wire 9-P connector and ground wire to fairing connector and ground connection. Place connector cover over connedions.
3) Connect radio switch wires to switch sub-harness wires.
4) Connect CB switch wires and CB passenger switch sub wires to CB switch sub harness wires.
5) Connect antenna feeder to feeder from distributor.
6) Connect branch lead to junction lead and attach it and antenna feeder to fairing mount flame with wire band.

Fig. 32

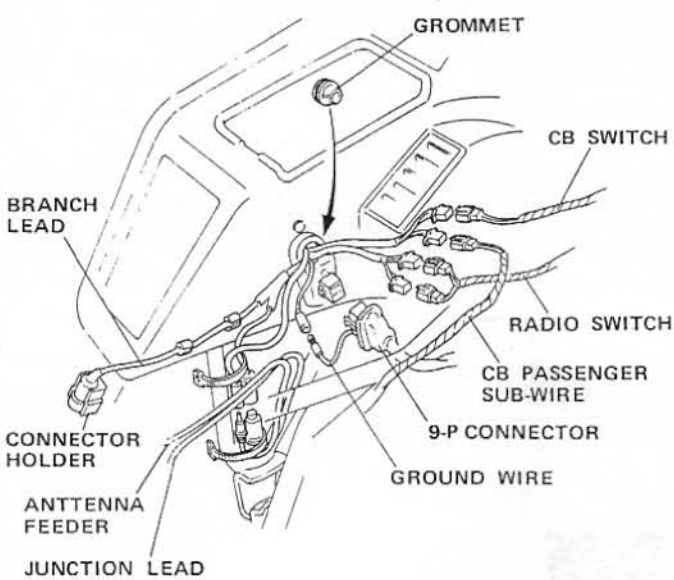

## WIRE ROUTING AND FUSES (Fig. 33)

1) Connect all wires to wire harness terminals properly.

2) Fuses are located in left turn signal base. To replace fuses, remove left turn signal.
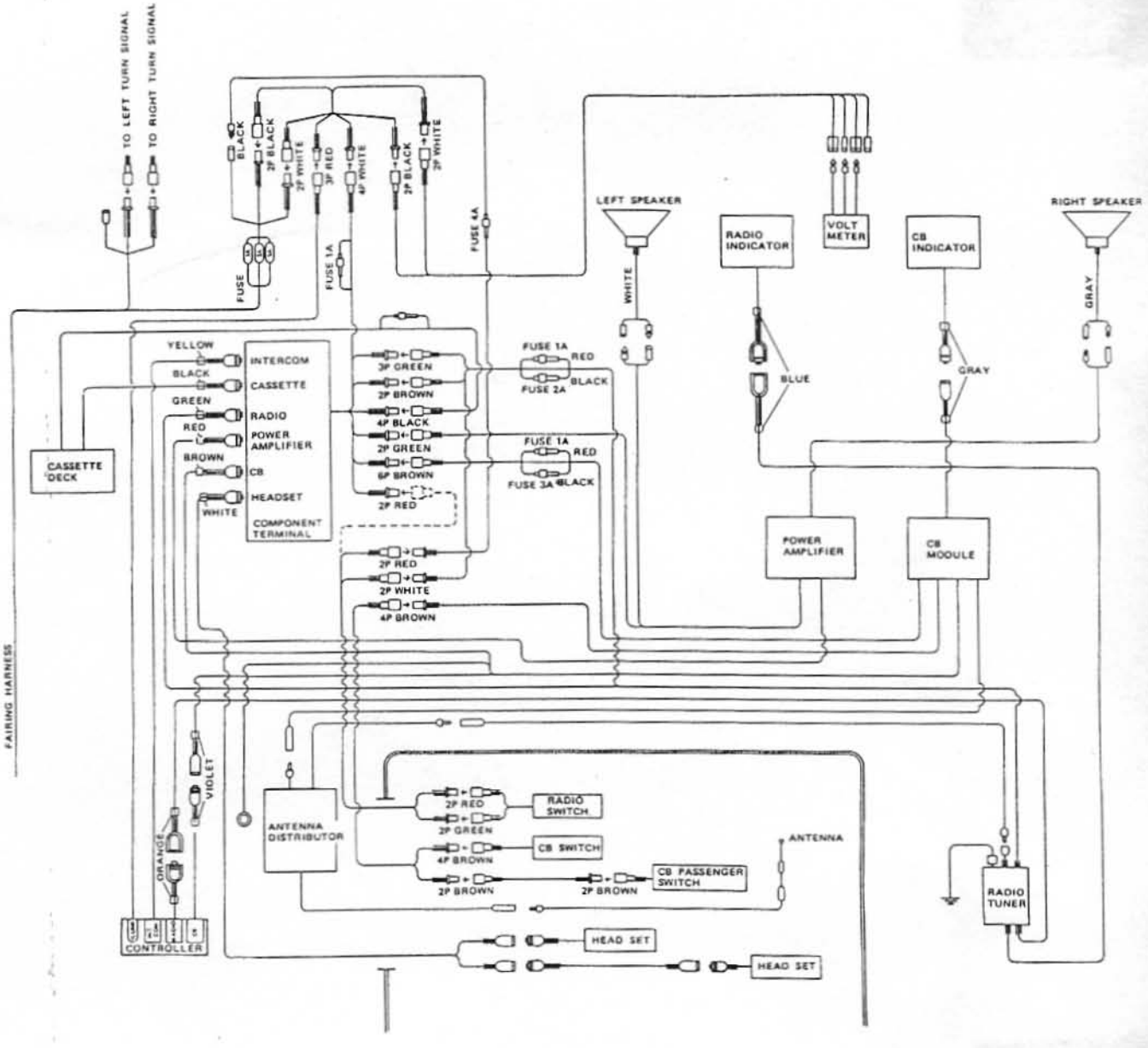
Fig. 33